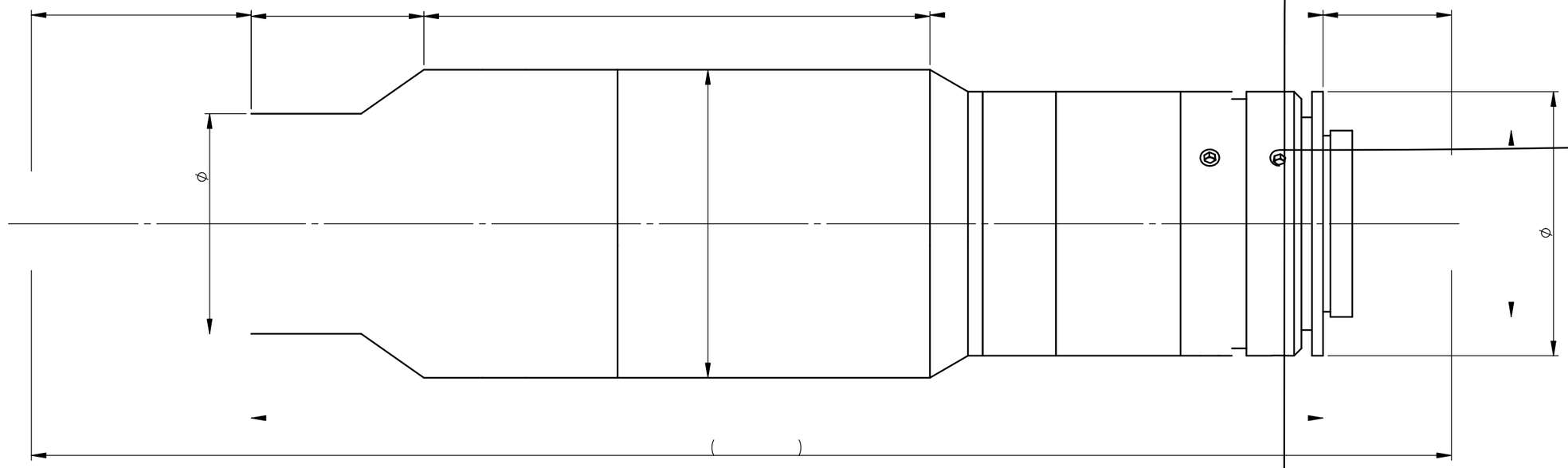

XF-MH03X380

CAN-RILL OPTICS